Monitoring, Reporting and Evaluation Toolbox

Dave Skole
Michigan State University

Measurement Structure

- Carbon and Emissions calculations
- Field Data Inventory
- Forest Change C Assessment
- Agricultural Biomass C Assessment
- Soil C Assessment
- Indicators of Carbon Benefits

Functional Process On-Line

- **Create your project**
- **Work on Your Project**
- **Report on Your Project**

On-Line Tool Structure

- Project Registry
- Content Management
- Knowledge Management
- Geospatial Data Management
- Field Inventory Data Management
- Carbon Calculations
- Emissions Calculations
- Report Management

Application of the MRV Tool

- Organizes multiple types of content and data from documents to field inventory data
- Provides an enterprise-wide management system for multiple projects and multiple users
- Makes necessary computations of carbon stocks and carbon emissions using standard or user-defined equations and models
- Provides an end-to-end measurement, reporting and verification platform for forest carbon management

Example Users

- Carbon Offset Projects for regulatory and voluntary markets
- International REDD+ projects
- Forest Investment programs and projects
- Program Monitoring and Evaluation
- Sustainable Agriculture and Sustainable Forest Management projects
- National Forest Inventories
- Facilities and entities with large forest land holdings
- National governments, communities and local governments, private land owners

Solutions

- Provides an *enterprise-wide* solution of on-line tools for planning and implementing: a) national forest inventory for carbon, b) development and management of carbon projects across all of your organization's offices and units, and c) enterprise training and capacity-building.

- Supports planning, tasking and implementation, and its distributed web-enabled approach allows managers in one office to communicate and interact with field offices and other offices or cooperators across the organization.

- This structure and its secure login and workspace design allows verifiers and others to review the project data, providing a level of transparency and openness needed for most carbon projects today.

Multiple Functions are On-Line

- Content Management for all project or program documents, reports, proposals, field guides, training manuals
- Mapping function to organize GIS data layers for Project boundaries, parcels and strata, field inventory plots
- Field sample plot inventory management, and carbon stock computation using standard or user defined allometric equations
- Computation of emissions and emission scenarios, through many potential land use and management situations
- Full reporting functions for report generation, verification, performance assessment, and external review

Flexibility

- Distributed information across the enterprise, modular design
- Low equipment costs and no maintenance
- Built-in training modules; can be used as a capacity building tool and as the operational system
- Detailed measurements and computation compatible with IPCC Tier 3, or simple computations using built-in standard values compatible with IPCC Tier 1.
- Performs ex-ante and ex-post analyses and computations
- Can be used for project planning, proposal preparation, or project implement and monitoring
- Can be customized for a range of different users and situations

Flexibility (continued)

- Can be used by field crews using paper data or in digital form with hand held field devices
- All forms, guides, and protocols for measurement are included, but content can also be customized
- Can be integrated with complex GIS data layers, multiple strata with field inventories and detailed computations of carbon stocks – or simply as an emissions estimator.
- Can be used for National Forest Inventory management or in its full capacity to use NFI information for carbon measurement and reporting for REDD+

Organization of Projects

- Problem: GEF needs a way to catalog projects that are developed carbon benefits
  - Pre-project (proposals)
  - During project (monitoring)
- Problem: Project managers need a way to organize their most important project documents
  - Enterprise-wide accessibility
  - Tracking work and document flows, etc
  - Knowledge management – source book

Firefox | Mail :: Reply: Re: Good to go? | CBP Links | Login

mrv.carbon2markets.org/toolbox/Login.aspx

Carbon Benefits Project:
Modelling,Measurement and Monitoring

MRE
Version 1.0

You Are Here: Landscape Carbon MRV System » Welcome to MRV

Landscape Carbon MRV System »

Sign in to the MRV

User Name: GEF

Password: ••••••••

Remember me next time.

Log In

12:17 AM
9/13/2012

Carbon Benefits Project:
Modelling,Measurement and Monitoring

Firefox | CBP Links | MRV Menu

mrv.carbon2markets.org/toolbox/projects/mrvmenu.aspx

Carbon Benefits Project:
Modelling,Measurement and Monitoring

MRE
Version 1.0

You Are Here: Landscape Carbon MRV System » Menu

You are logged as:GEF logout

Menu

- Create a project
- Work on your projects
- Report on your projects

12:24 AM
9/13/2012

Carbon Benefits Project:
Modelling,Measurement and Monitoring

Firefox | CBP Links | Review Project Information

mrv.carbon2markets.org/toolbox/projects/reviewNewProject.aspx?p=Rukinga Ranch Demo

Review Information for Project: Rukinga Ranch Demo

This is your project information:

Project Name	Rukinga Ranch Demo
Documents	Click to Open List
Region	Africa
Country	Kenya
Project Type	Biodiversity
Abstract	Demon... Expand
Contact Person	Mike Smalligan
Email Address	smallig2@msu.edu
Phone Number	517-355-4524
Address	1405 South Harrison
Address 2	Suite 101
City	East Lansing
State/Province/Region	MI
ZIP Code	48823
Country	United States
Project Duration (years)	30
Climate Zone	Tropical
Moisture Zone	Dry

Edit Information | Map Data > | Inventory Data >

Project Description

*The **Project Description** page is a resource for project managers to organize and distribute project documents in a*

Help

12:28 AM
9/13/2012

Firefox | CBP Links | Create or Modify a Project

mrv.carbon2markets.org/toolbox/projects/createProject.aspx

Carbon Benefits Project:
Modelling,Measurement and Monitoring

MRE
Version 1.0

You Are Here: Landscape Carbon MRV System » Menu » Create a Project

You are logged as:GEF logout

Create a Project

In this area you can create a new project, or modify the information of one that you created before. Select one of the two options:

☐ New ☑ Existing Projects

Project	Name	Options
Biodiversity Conservation in Sabah, Malaysia	Sustainable Forest Management	
Demonstration	REDD	
Rukinga Ranch Demo	Biodiversity	
Yala Watershed	Land Degradation	

12:24 AM
9/13/2012

Carbon Benefits Project:
Modelling,Measurement and Monitoring

Firefox | CBP Links | Update Project Information

mrv.carbon2markets.org/toolbox/projects/editProjectInfo.aspx?p=Rukinga Ranch Demo

Carbon Benefits Project:
Modelling,Measurement and Monitoring

MRE
Version 1.0

You Are Here: Landscape Carbon MRV System » Menu » Create Project » Project Description

You are logged as:GEF logout

Modify Information for Project: Rukinga Ranch Demo

Select a file:

C:\MSU\Carbon Benefi Browse...

Type of file:

Budget

Upload

Upload a Project Document

tools using the Rukinga project as a demo

Manager / Contact Person:

12:27 AM
9/13/2012

Project Development

- Problem: project developers and project managers need a way to develop projects
  - Define areas of interest
  - Define strata, intervention areas, data plots, etc
- Problem: project developers and project managers need a way to organize spatial information – ie maps and GIS

Firefox | CBP Links | Map Data

mrv.carbon2markets.org/toolbox/projects/1/index.aspx

You Are Here: Landscape Carbon MRV System » Menu » Create Project » Map Data

You are logged in as: GEF logout

Mapping Data for Project: Rukinga Ranch Demo

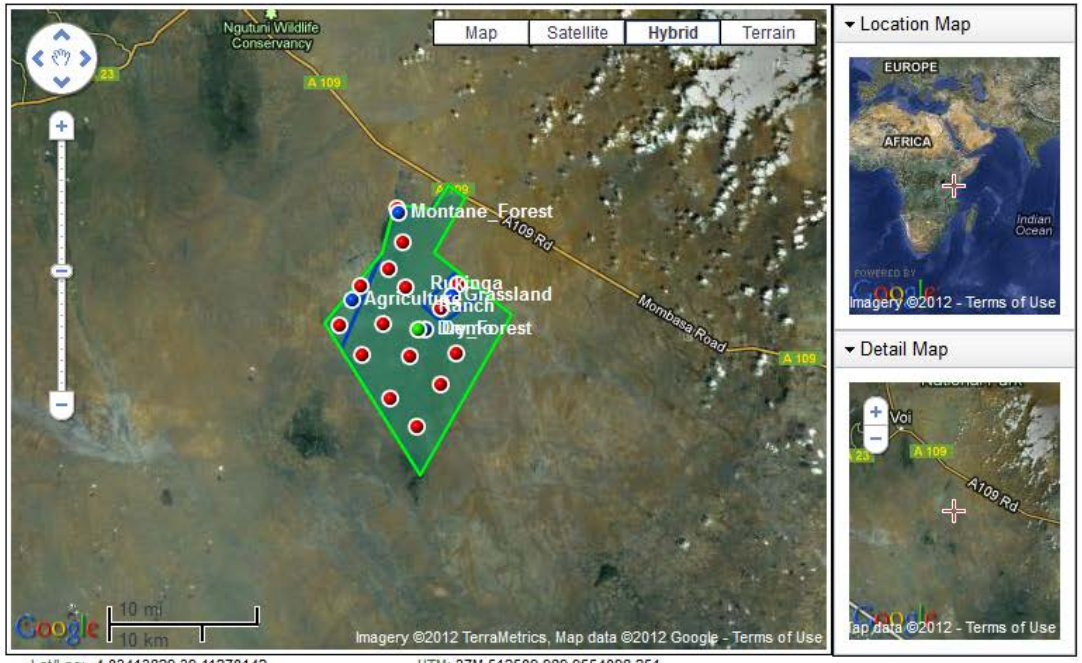

Lat/Lng: -4.03413829,39.11270142 UTM: 37M 512509.989 9554098.251

File	Map Project	Map Parcels	Map Plots
Save	Draw Boundary	Draw Parcel	Draw Plot
Clear Map	Place Marker	Place Marker	Place Marker

12:30 AM 9/13/2012

Carbon Measures

- Problem: project managers need a tool to guide data collection and compute carbon from ground measures – Tier 3
  - Carbon stocks (plot, strata, project) – biomass and soil
- Problem: projects need a tool to help collect biodiversity and ancillary data
- Problem: projects and countries need a way to develop and make available national inventories
  - e.g. NFI, National Emissions Inventory Reporting for LULUCF and ALU

Firefox | CBP Links | Inventory Data

mrv.carbon2markets.org/toolbox/projects/newProject_step3.aspx

Inventory Data for Project: Rukinga Ranch Demo

[Reload Page]

1. Plot Data Template — Download
2. Field Measurement Guides — Download
3. Project Information

Project Name: Rukinga Ranch Demo

Mapped Area: 30176.9014 ha Reported Area: 30168.000(ha

Carbon Stocks by Parcel

Parcel Descriptors (Values below in ha)		Carbon Density (Values below in tC/ha)					Carbon Stocks (Values below in tC)					
ID	Area	AGB	BGB	SOC	Litter	Deadwood	AGB	BGB	Soil	Litter	Deadwood	Total
Agriculture	713.0	19.3	7.7	112.0	0.7	0.4	13,791.3	5,516.5	79,856.0	470.6	270.9	99,905.3
Dry_Forest	27,787.0	11.3	4.4	112.0	0.4	0.4	312,882.0	122,131.5	3,112,144.0	11,392.7	11,670.5	3,570,220.6
Grassland	1,610.0	0.8	0.3	112.0	0.0	1.3	1,283.8	513.5	180,320.0	48.3	2,141.3	184,306.9
Montane_Forest	57.0	12.1	4.8	112.0	0.4	0.0	690.7	276.3	6,384.0	25.1	0.0	7,376.1
Project Totals	**30,167.0**						**328,647.8**	**128,437.8**	**3,378,704.0**	**11,936.6**	**14,082.8**	**3,861,809.0**

Close

8. Manage Parcels & Plots — Click Here

Carbon Stocks by Parcel

9. Carbon Stocks by Parcel — Click Here
10. Carbon Stocks by Plot — Click Here

You must Select a Parcel in step 4 to activate this link.

11. Carbon Calculator Summary — Click Here
12. Plot Summary — Click Here

You must Select a Parcel in step 4 to activate this link.

12:31 AM 9/13/2012

Firefox | CBP Links | Inventory Data

mrv.carbon2markets.org/toolbox/projects/newProject_step3.aspx

Mapped Area: 30176.9014 ha Reported Area: 30168.000(ha

4. Parcel Information

Add a Parcel

Select a Parcel

5. Plot Information

Add a Plot

Project: Rukinga Ranch Demo **Region:** Africa **Duration:** 30 years

Climate Zone: Tropical **Moisture Zone:** Dry

Parcel Descriptors			Mean Land Cover Inputs					Allometry
ID	Location	Area (ha)	AGB tDM/ha	BGB tDM/ha	SOC tC/ha	Litter tC/ha	Deadwood tC/ha	Root/Shoot Ratio
Agriculture	Kenya	713.0	41.2	16.5	112.0	0.7	0.4	0.4
Dry_Forest	Kenya	27,787.0	24.0	9.4	112.0	0.4	0.4	0.4
Grassland	Kenya	1,610.0	1.7	0.7	112.0	0.0	1.3	0.4
Montane_Forest	Kenya	57.0	25.8	10.3	112.0	0.4	0.0	0.4

Close

12. Plot Summary Click Here

You must Selec Carbon Calculator Summary *s link.*

Inventory Data

*The **Inventory Data** page is a resource to manage inventory data collected for the project. The Inventory Data page provides measurement guidelines, spreadsheets for data collection and upload into an online database, and reporting functions to see the results of carbon stock calculations for the project.*

Help

Tutorials

12:31 AM 9/13/2012

Carbon Emissions

- Problem: GEF managers need a way to compute carbon emissions and removals from the projects portfolio and any project
- Problem: project managers need a way to compute Tier 3 (also T2, T1) emissions and removals across a range of forest and agriculture scenarios
  - Ex ante
  - Ex post

Firefox | CBP Links | MRV - Emissions Calculator

mrv.carbon2markets.org/ecalc/

Carbon Benefits Project:
Modelling,Measurement and Monitoring

MRE
Version 1.0

You Are Here: Landscape Carbon MRV System » Menu » Work on Your Projects

Help

Emissions Calculator

The Emissions Calculator is an online tool to estimate greenhouse gas emissions from agriculture, forestry and other land use projects and activities. The primary emphasis is on forestry and agroforestry projects including afforestation/reforestation, reducing emissions from deforestation and degradation, and modified agricultural practices. The tool is built upon common greenhouse gas emissions calculations and regional carbon stock values published by the Intergovernmental Panel on Climate Change (IPCC). Users can use the default IPCC values (Tier 1), enter national values (Tier 2), or enter their own project data from field measurements (Tier 3) to define the carbon stocks associated with various land covers, practices, or activities. The Emissions Calculator reports emissions associated with a Reference Scenario, a Project Scenario, and the difference between these two scenarios. The terrestrial carbon stocks and the greenhouse gas emissions are reported on an annual basis over the duration of the project. The tool was developed by the Global Observatory for Ecosystem Services at Michigan State University and Applied GeoSolutions, Inc. for the Carbon Benefits Project funded by the Global Environment Facility.

Projects ▶

Logout ▶

12:32 AM
9/13/2012

Carbon Benefits Project:
Modelling,Measurement and Monitoring

Firefox | CBP Links | MRV - Emissions Calculator

mrv.carbon2markets.org/ecalc/project/138/

Project Demonstration

Continent	Africa
Climate	Tropical Montane
Moisture	Moist
Soil Type	LAC
Duration	30
Carbon/DryMatter	0.47

Project List ▶

Delete Project ▶

Home ▶

Logout ▶

Project Scenarios

Scenario	Reference Scenario	Emissions (t CO2)	Reference difference
REDD Project	25% Degradation	-2,586,359	-5,526,336
Plant Trees	Remain Agriculture	-2,744,876	-2,744,876

add new

Reference Scenarios

Scenario	Parcel	Emissions (t CO2)
25% Degradation	Primary Forest	2,939,977
Remain Agriculture	Smallholder Agriculture	0

add new

Parcels

Parcel	Location	Area (ha)	Land Cover
Primary Forest	SW Mau Block	78000.0	Mau Forest
Smallholder Agriculture	SW Mau Block	130000.0	Mau Agriculture

add new

Practices

Practice	Category	Harvest	Burn

12:33 AM
9/13/2012

Firefox | CBP Links | MRV - Emissions Calculator

mrv.carbon2markets.org/ecalc/project/138/scenario/304/results/

REDD Project

Home

Logout

Year	Biomass (tC)	Dead (tC)	Soil (tC)	HWP (tC)	Annual CO2 Emissions (tCO2)	Annual Non-CO2 Emissions (tCO2e)	Atmosphere (tCO2e)
0	16,038,750	284,700	3,666,000	0	0	0	0
1	14,597,829	256,230	3,647,670	1,099,800	1,423,671	0	1,423,671
2	14,760,782	256,230	3,629,340	1,099,800	-530,769	0	892,902
3	14,923,736	256,230	3,611,010	1,099,800	-530,769	0	362,133
4	15,086,690	256,230	3,592,680	1,099,800	-530,769	0	-168,636
5	15,249,644	256,230	3,574,350	1,099,800	-530,769	0	-699,405
6	15,412,597	256,230	3,556,020	1,099,800	-530,769	0	-1,230,174
7	15,575,551	256,230	3,537,690	1,099,800	-530,769	0	-1,760,943
8	15,738,505	256,230	3,519,360	1,099,800	-530,769	0	-2,291,712
9	15,901,458	256,230	3,501,030	1,099,800	-530,769	0	-2,822,481
10	16,038,750	256,230	3,482,700	1,099,800	-436,589	0	-3,259,070
11	16,038,750	256,230	3,464,370	1,099,800	67,271	0	-3,191,799
12	16,038,750	256,230	3,446,040	1,099,800	67,271	0	-3,124,528
13	16,038,750	256,230	3,427,710	1,099,800	67,271	0	-3,057,257
14	16,038,750	256,230	3,409,380	1,099,800	67,271	0	-2,989,986
15	16,038,750	256,230	3,391,050	1,099,800	67,271	0	-2,922,715
16	16,038,750	256,230	3,372,720	1,099,800	67,271	0	-2,855,444
17	16,038,750	256,230	3,354,390	1,099,800	67,271	0	-2,788,172
18	16,038,750	256,230	3,336,060	1,099,800	67,271	0	-2,720,901
19	16,038,750	256,230	3,317,730	1,099,800	67,271	0	-2,653,630
20	16,038,750	256,230	3,299,400	1,099,800	67,271	0	-2,586,359
21	16,038,750	256,230	3,299,400	1,099,800	0	0	-2,586,359

12:34 AM 9/13/2012

Adaptive Use Examples

- **Training Tool (WWF, GoK, GoI, GoT, GoVN)**
  - Content Management section: training documents, videos, lessons, etc
  - Spatial and Inventory section: pre-loaded sample plots, maps, project data
- **National Forest Inventory Tool (USFS, USAID):**
  - Content Management with Access Manager: national regions
  - Inventory and Carbon Calculator: structured for remote uploading
- **National GHG Inventory Reporting Tool (USEPA):**
  - Content Management: Template Workbook, guidelines
  - Emissions Calculator: all AFOLU classes, land use scenarios
- **National REDD Forest Investment (CIF/FIP)**
  - Content Management: Investment Plan, Results Framework, Sourcebook
  - Inventory and Carbon Calc: National Forest Inventory manager
  - Emissions Calculator: Results Framework

Carbon2Markets :: Projects - Mozilla Firefox

File Edit View History Bookmarks Tools Help

GOES | Carbon2Markets :: Projects

http://www.carbon2markets.org/redd/peru/

Carbon2Markets™

- Main
- About Us
- Biographies
- Projects
  - Reforestation and Agroforestry
  - REDD+
- Partners
- Research
- Publications
- News
- Contact Us

Carbon 2 Markets™

Measurement & Monitoring

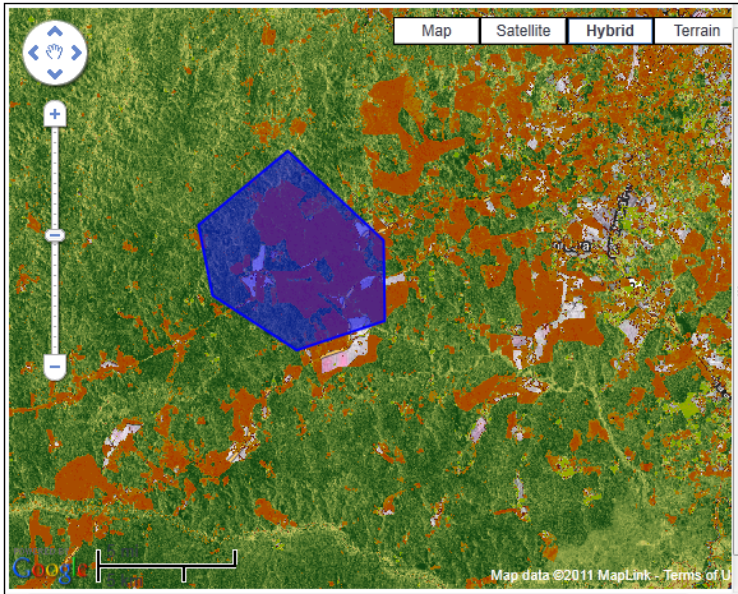

Total Area Analyzed: 8782.33 ha

Baseline Year Forest Area: 8532.87 ha

Intervention Year Forest Area: 5486.89 ha

	Biomass (tonnes)	Carbon (tonnes)	CO2e (tonnes)
Baseline Year	1945494.36	914382.35	3352735.28
Intervention Year	1020561.54	479663.92	1758767.72
Change	924932.82	434718.43	1593967.56

IPCC Tier I Above ground Biomass for Tropical Tropical Rain Forest S. America: 300 tonnes dry matter per hectare.

Estimates calculated on deforestation and forest fractional cover to downscale from discrete 100 % forest cover.

- Location Map
- Carbon Benefits Index
  - Select Index to calculate
    - Carbon Benefits Index
    - Normalized C.B. Index
    - Environmental Index
    - Carbon Quantity Index
    - Carbon Quantity
    - Social Index (CCBS)

Draw Polygon

Delete Polygon

Recalculate

Results

Area analyzed: 8782.33 ha

- Layers
  - Land Cover
    - REDD Baseline
    - REDD Intervention (D)
    - REDD Intervention (R)
    - Baseline FFC
    - REDD Intervention FFC
    - Change in FFC
    - Baseline Forest Carbon
    - REDD Interv. Carbon
    - Change in Carbon
  - GIS Data
- Social Index (CCBS)

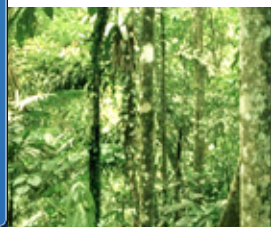

Use of MAC

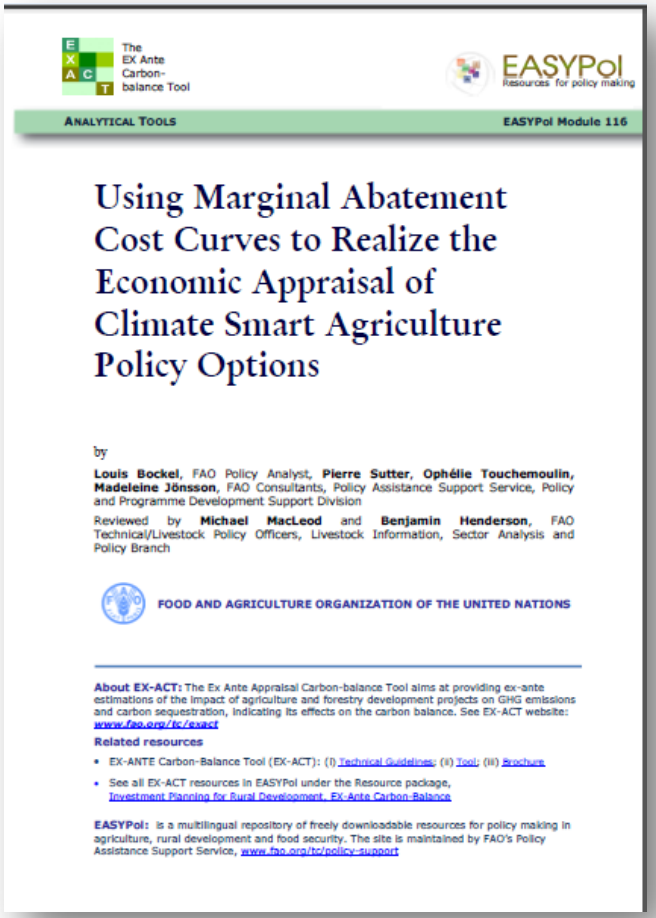

The EX Ante Carbon-balance Tool

EASYPol Resources for policy making

ANALYTICAL TOOLS — EASYPol Module 116

Using Marginal Abatement Cost Curves to Realize the Economic Appraisal of Climate Smart Agriculture Policy Options

by

Louis Bockel, FAO Policy Analyst, **Pierre Sutter**, **Ophélie Touchemoulin**, **Madeleine Jönsson**, FAO Consultants, Policy Assistance Support Service, Policy and Programme Development Support Division

Reviewed by **Michael MacLeod** and **Benjamin Henderson**, FAO Technical/Livestock Policy Officers, Livestock Information, Sector Analysis and Policy Branch

FOOD AND AGRICULTURE ORGANIZATION OF THE UNITED NATIONS

About EX-ACT: The Ex Ante Appraisal Carbon-balance Tool aims at providing ex-ante estimations of the impact of agriculture and forestry development projects on GHG emissions and carbon sequestration, indicating its effects on the carbon balance. See EX-ACT website: www.fao.org/tc/exact

Related resources

- EX-ANTE Carbon-Balance Tool (EX-ACT): (i) Technical Guidelines; (ii) Tool; (iii) Brochure
- See all EX-ACT resources in EASYPol under the Resource package, Investment Planning for Rural Development: EX-Ante Carbon-Balance

EASYPol: is a multilingual repository of freely downloadable resources for policy making in agriculture, rural development and food security. The site is maintained by FAO's Policy Assistance Support Service, www.fao.org/tc/policy-support

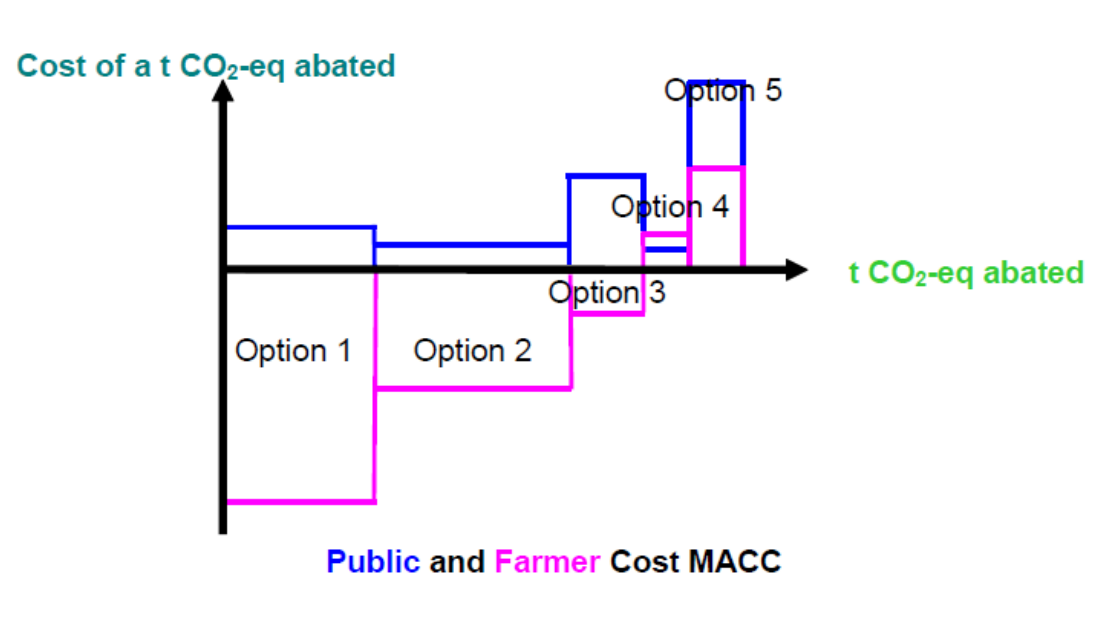

Figure 1: Global MAC curve beyond business as usual - 2030

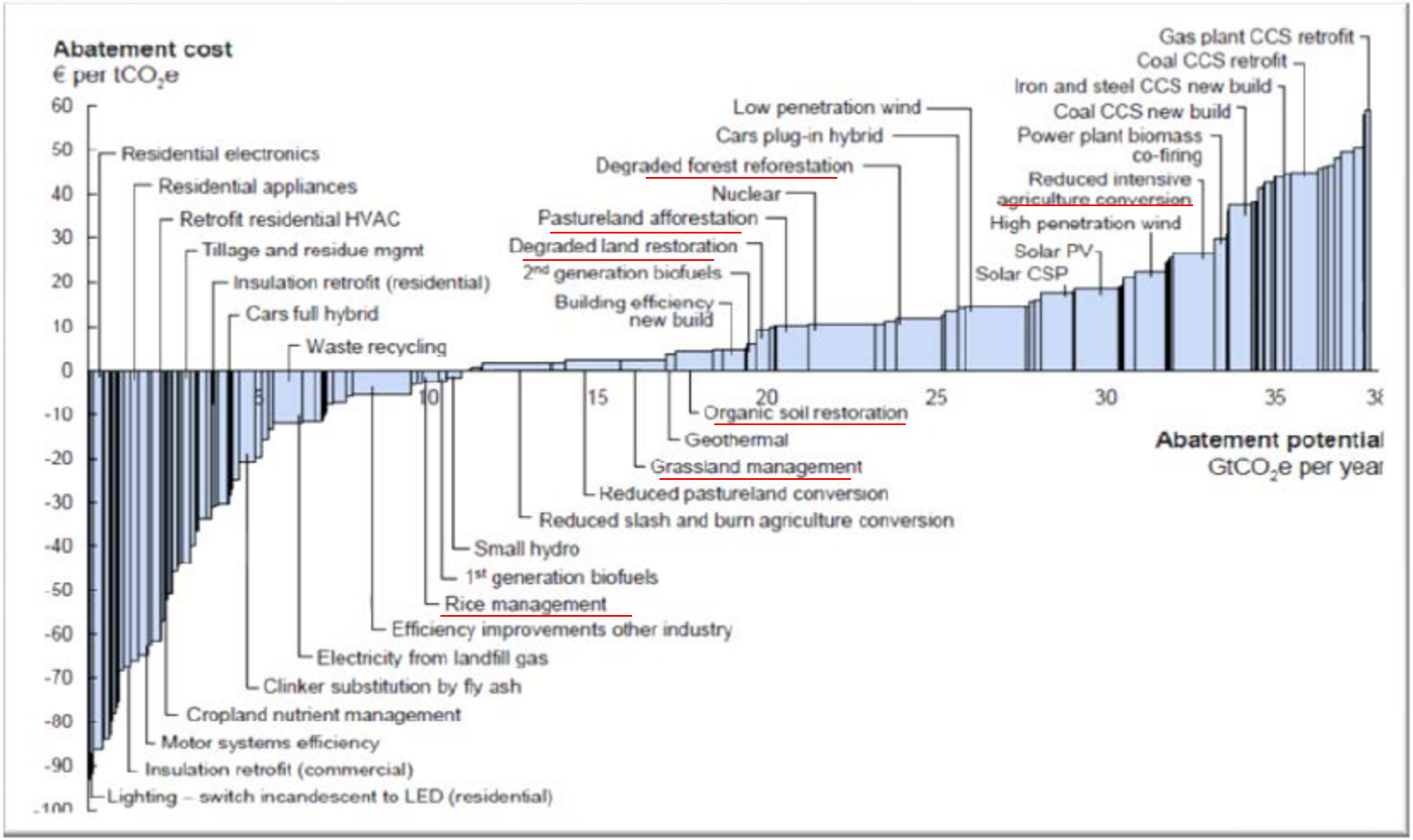

Source: Pathways to a Low-Carbon economy version 2 (McKinsey&Company, 2009)